Device = LM5122MH/NOPB
Topology = Boost
Created = Wed Jul 15 18:29:29 GMT +0800 2015
BOM Cost = $5.03
Footprint = 831.7 mm^2
BOM Count = 24

WEBENCH® Design Report

Design : 3748350/2 LM5122MH/NOPB
Edited - LM5122MH/NOPB 5.0V-12.0V to 12.00V @ 5.0A - (#1)

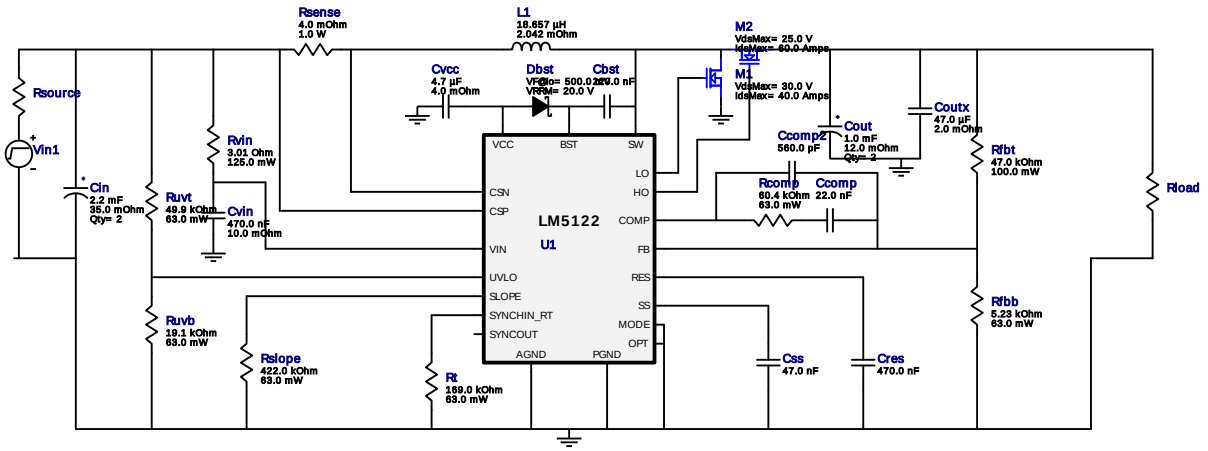

Electrical BOM

#	Name	Manufacturer	Part Number	Properties	Qty	Price	Footprint
1.	Cbst	MuRata	GRM155R71C224KA12D Series= X7R	Cap= 220.0 nF VDC= 16.0 V IRMS= 0.0 A	1	$0.01	0402 3 mm^2
2.	Ccomp	Yageo America	CC0805KRX7R9BB223 Series= X7R	Cap= 22.0 nF VDC= 50.0 V IRMS= 0.0 A	1	$0.01	0805 7 mm^2
3.	Ccomp2	Yageo America	CC0805KRX7R9BB561 Series= X7R	Cap= 560.0 pF VDC= 50.0 V IRMS= 0.0 A	1	$0.01	0805 7 mm^2
4.	Cin	Panasonic	EEV-FK1E222M Series= FK	Cap= 2.2 mF ESR= 35.0 mOhm VDC= 25.0 V IRMS= 1.8 A	2	$0.74	SM_RADIAL_J16 399 mm^2
5.	Cout	Panasonic	16SVPF1000M Series= SVPF	Cap= 1.0 mF ESR= 12.0 mOhm VDC= 16.0 V IRMS= 5.4 A	2	$0.74	CAPSMT_62_F12 151 mm^2
6.	Coutx	MuRata	GRM32ER61C476ME15L Series= X5R	Cap= 47.0 uF ESR= 2.0 mOhm VDC= 16.0 V IRMS= 0.0 A	1	$0.24	1210 15 mm^2
7.	Cres	Taiyo Yuden	TMK212BJ474KD-T Series= X5R	Cap= 470.0 nF VDC= 20.0 V IRMS= 0.0 A	1	$0.02	0805 7 mm^2
8.	Css	MuRata	GRM155R61A473KA01D Series= X5R	Cap= 47.0 nF VDC= 10.0 V IRMS= 0.0 A	1	$0.01	0402 3 mm^2

Copyright © 2015, Texas Instruments Incorporated

#	Name	Manufacturer	Part Number	Properties	Qty	Price	Footprint
9.	Cvcc	MuRata	GRM21BR61E475KA12L Series= X5R	Cap= 4.7 uF ESR= 4.0 mOhm VDC= 25.0 V IRMS= 0.0 A	1	$0.03	0805 7 mm²
10.	Cvin	MuRata	GRM188R71C474KA88D Series= X7R	Cap= 470.0 nF ESR= 10.0 mOhm VDC= 16.0 V IRMS= 0.0 A	1	$0.02	0603 5 mm²
11.	Dbst	Diodes Inc.	B220-13-F	VF@Io= 500.0 mV VRRM= 20.0 V	1	$0.08	SMB 44 mm²
12.	L1	CUSTOM	CUSTOM	L= 18.657 µH DCR= 2.042 mOhm	1	NA	CUSTOM 0 mm²
13.	M1	Infineon Technologies	BSZ050N03MS G	VdsMax= 30.0 V IdsMax= 40.0 Amps	1	$0.29	PG-TSDSON-8 19 mm²
14.	M2	Texas Instruments	CSD16340Q3	VdsMax= 25.0 V IdsMax= 60.0 Amps	1	$0.44	TRANS_NexFET_Q3 19 mm²
15.	Rcomp	Vishay-Dale	CRCW040260K4FKED Series= CRCW..e3	Res= 60.4 kOhm Power= 63.0 mW Tolerance= 1.0%	1	$0.01	0402 3 mm²
16.	Rfbb	Vishay-Dale	CRCW04025K23FKED Series= CRCW..e3	Res= 5.23 kOhm Power= 63.0 mW Tolerance= 1.0%	1	$0.01	0402 3 mm²
17.	Rfbt	Susumu Co Ltd	RR1220P-473-D Series= RR12	Res= 47.0 kOhm Power= 100.0 mW Tolerance= 0.5%	1	$0.01	0805 7 mm²
18.	Rsense	Panasonic	ERJ-M1WSF4M0U Series= ERJ	Res= 4.0 mOhm Power= 1.0 W Tolerance= 1.0%	1	$0.15	2512 43 mm²
19.	Rslope	Vishay-Dale	CRCW0402422KFKED Series= CRCW..e3	Res= 422.0 kOhm Power= 63.0 mW Tolerance= 1.0%	1	$0.01	0402 3 mm²
20.	Rt	Vishay-Dale	CRCW0402169KFKED Series= CRCW..e3	Res= 169.0 kOhm Power= 63.0 mW Tolerance= 1.0%	1	$0.01	0402 3 mm²
21.	Ruvb	Vishay-Dale	CRCW040219K1FKED Series= CRCW..e3	Res= 19.1 kOhm Power= 63.0 mW Tolerance= 1.0%	1	$0.01	0402 3 mm²
22.	Ruvt	Vishay-Dale	CRCW040249K9FKED Series= CRCW..e3	Res= 49.9 kOhm Power= 63.0 mW Tolerance= 1.0%	1	$0.01	0402 3 mm²
23.	Rvin	Vishay-Dale	CRCW08053R01FKEA Series= CRCW..e3	Res= 3.01 Ohm Power= 125.0 mW Tolerance= 1.0%	1	$0.01	0805 7 mm²
24.	U1	Texas Instruments	LM5122MH/NOPB	Switcher	1	$2.16	MXA20A 71 mm²

Design Assistance

1. LM5122 Product Folder : http://www.ti.com/product/LM5122 : contains the data sheet and other resources.

Texas Instruments' WEBENCH simulation tools attempt to recreate the performance of a substantially equivalent physical implementation of the design. Simulations are created using Texas Instruments' published specifications as well as the published specifications of other device manufacturers. While Texas Instruments does update this information periodically, this information may not be current at the time the simulation is built. Texas Instruments does not warrant the accuracy or completeness of the specifications or any information contained therein. Texas Instruments does not warrant that any designs or recommended parts will meet the specifications you entered, will be suitable for your application or fit for any particular purpose, or will operate as shown in the simulation in a physical implementation. Texas Instruments does not warrant that the designs are production worthy.

You should completely validate and test your design implementation to confirm the system functionality for your application prior to production.

Use of Texas Instruments' WEBENCH simulation tools is subject to Texas Instruments' Site Terms and Conditions of Use. Prototype boards based on WEBENCH created designs are provided AS IS without warranty of any kind for evaluation and testing purposes and are subject to the terms of the Evaluation License Agreement.